Bolted connectors

Power Accessories

Summary

1. The function of bolted connectors

The function of bolted connectors

Connecting of power cables or with other energy devices

- Low voltage, medium voltage and high voltage
- With conductor cross sections 6 – 300 – 630 – 1000 – 2000 – 2500 mm²

The connection must transmit electrical energy - means high current - during the whole lifetime without negative influence on:

→ the own function

→ joints, terminations and plugs concerning their thermal, mechanical and insulation behaviour

Electrical Contact – Quality Factor

homogeneous conductor

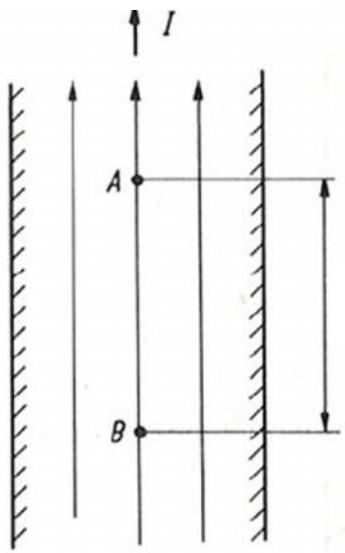

$R_{conductor}$

connection

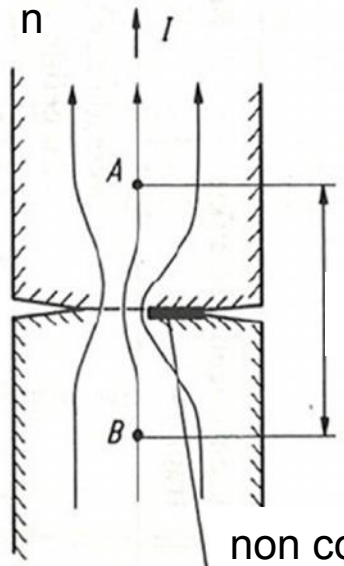

$R_{connector}$

quality factor $k = \frac{R_{connecto}}{R_{conductor}}$

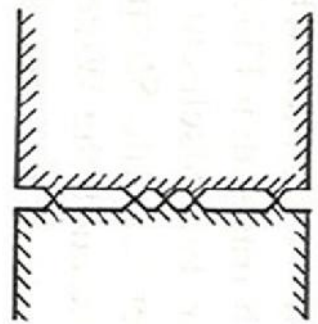

micro contacts

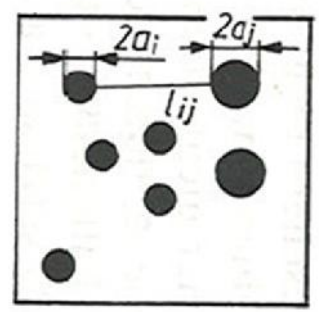

non conductive layer

pretented contact area

mechanical suporting area A_t

electrical conductive area A_w

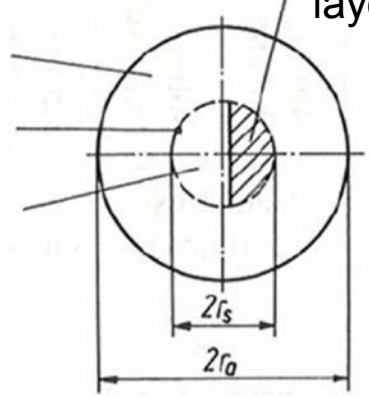

Aw << As

Behaviour of the Electrical Contact

Behaviour of the quality factor: $k = \frac{R_{connector}}{R_{conductor}}$

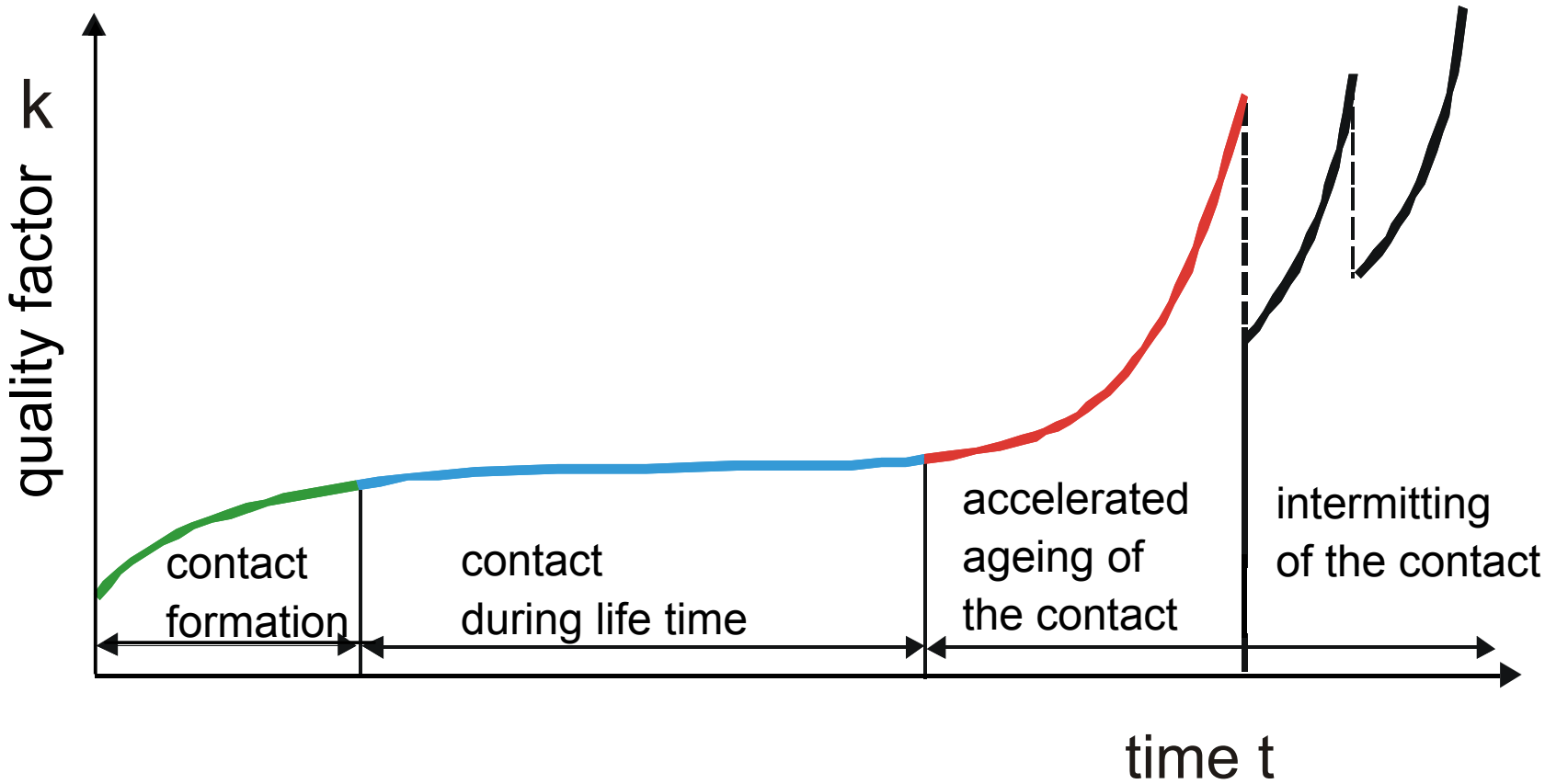

Connector Resistance and Losses

The high rated currents I of the cable have to be carried by the connector during the whole life time.

The temperature*) of the connection must be low to decrease the ageing of the contacts.
That means that the losses $P = I^2 * R_{conn}$ must be low.
For that reason the connector resistance R_{conn} must be low.

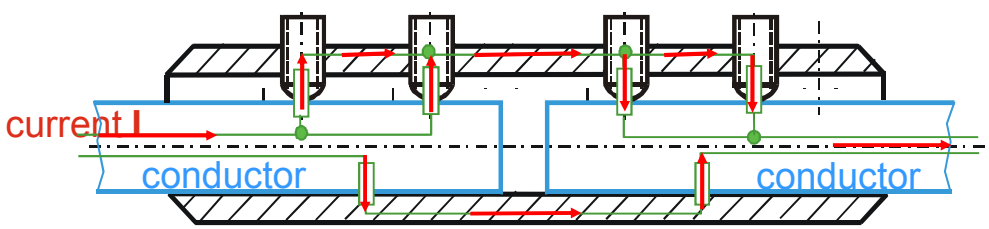

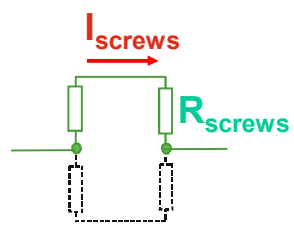

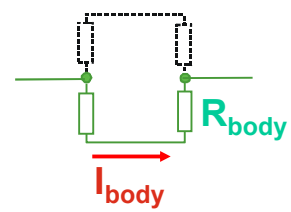

The connector resistance R_{conn} depends on:

- the resistance of the connector body and of the screws (material, shape)
- the contact resistance between conductor and connector body
- the contact resistance between conductor and screw tip
- the contact resistance between the wires of the conductor

**) the temperature can be influenced by heat transfer due to conduction, radiation, convection (continuous current) and heat storage (short circuit current)*

Effects on the Contact Resistance

A low contact resistance R_{conn} between:

- conductor and connector body
- conductor and screw tip
- the wires of the conductor can be achieved by
- **a high contact force F**
- **grooves** to break non conductive layers and to generate a defined contact area

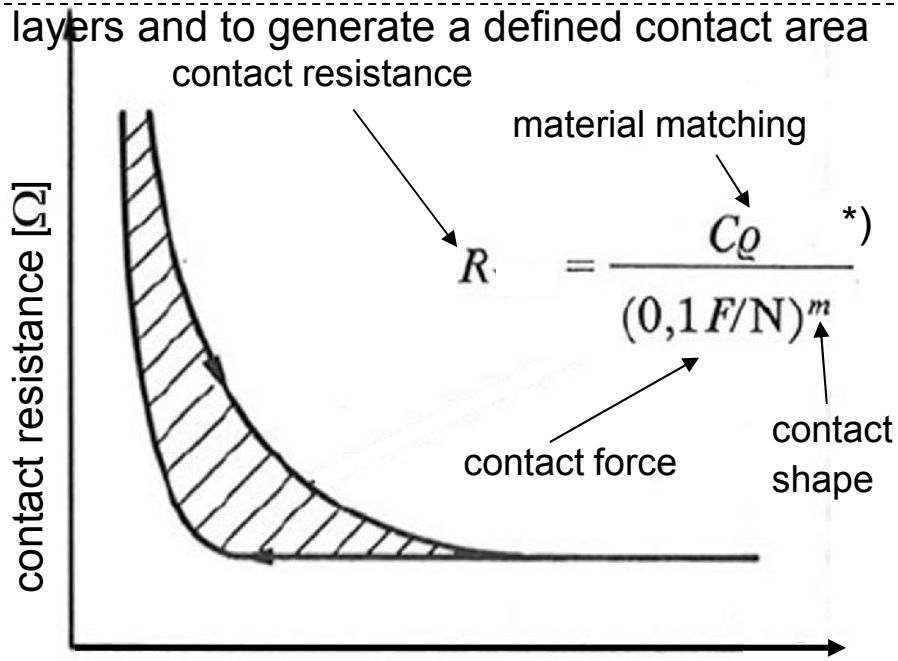

*) from: Böhme, H. : Mittelspannungstechnik. Verlag Technik GmbH; Berlin, München,1992

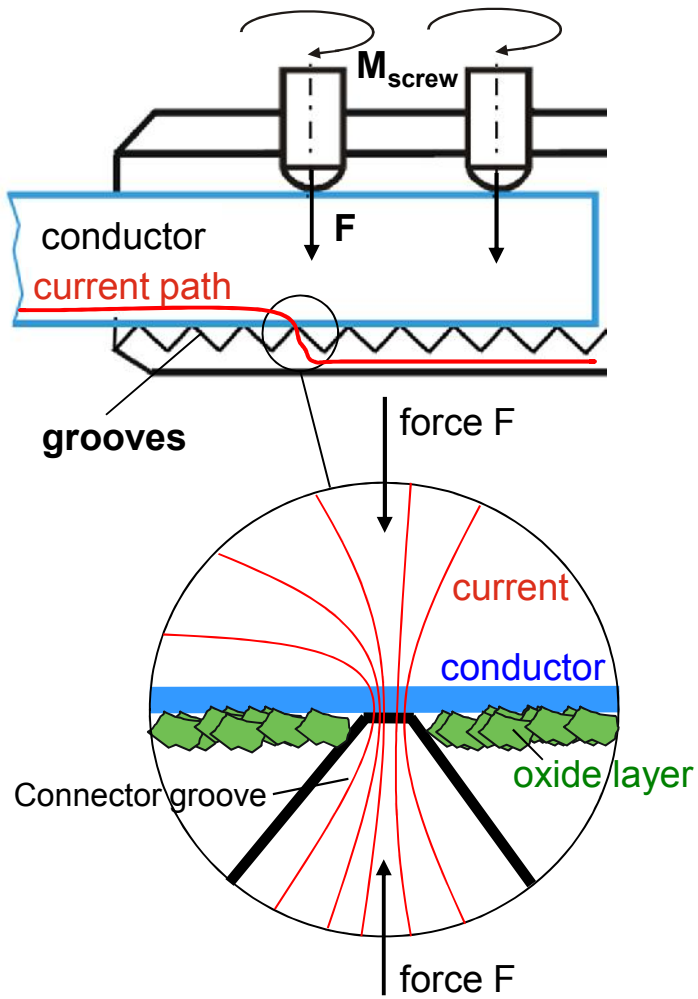

Contact Resistance depending on the Screwing Moment

screwing moment M_{screw}

↓

contact force F_c

↓

connector resistance R_{conn}

$$F_{screw} = \frac{M_{screw}}{k_1 P + k_2 \mu_G d_2 + k_3 \mu_S D}$$

thread pitch

friction

diameter

friction

diameter

tip

thread

k_1: 0,16
k_2: 0,58
k_3: 0,5

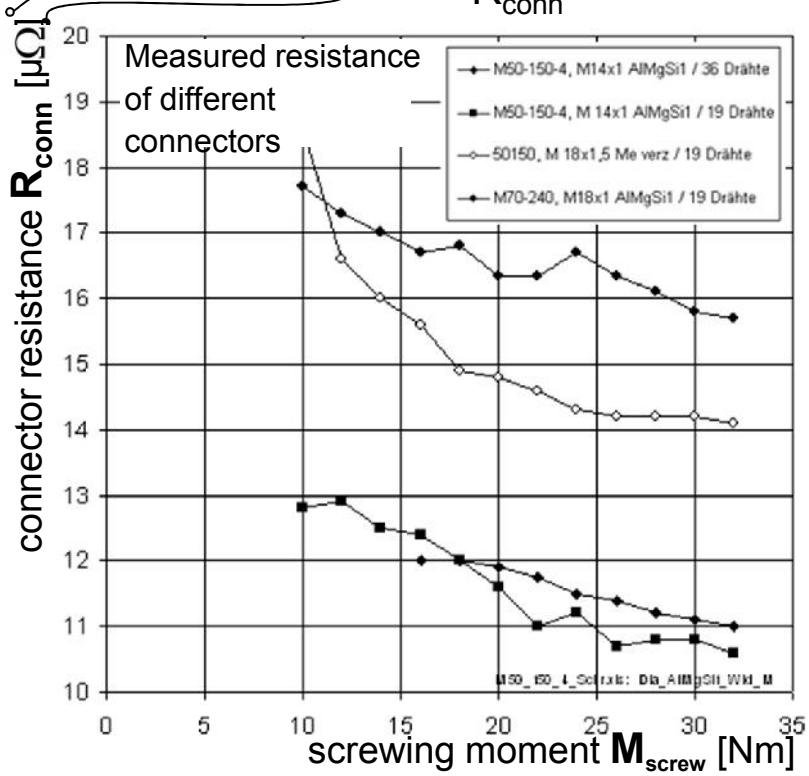

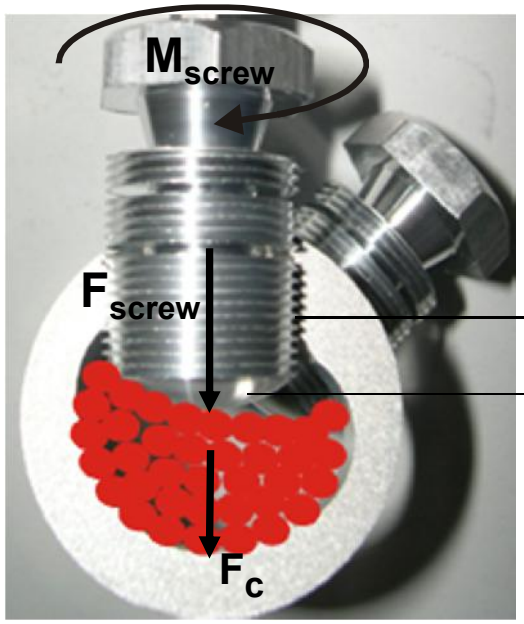

Contact Ageing

The electrical resistance of a connection can be increased by:

- chemical ageing, means increasing of oxide layers and due to that constriction of micro contacts

- floating - espacially of aluminium conductors - and due to that reducing of the contact force

➢ Both effects will be accelerated at higher temperatures

➢ Because of that the electrical losses should be as small as possible

Crimped versus Bolted Connectors

Compression connections – crimping

- For every cross section a special crimp connector is needed.
- A copper conductor needs a copper connector.
- An aluminium conductor needs an aluminium connector.

- Heavy tools and a lot of different dies are necessary

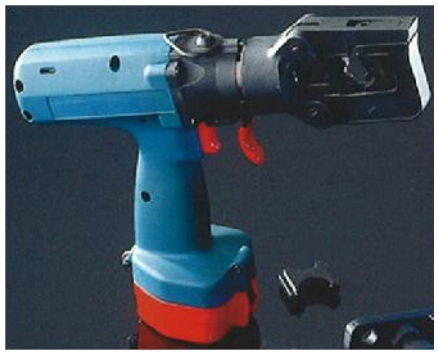

Bolted connections – screwing

- Are range taking concerning conductor cross section for low and medium voltage application.
- Are adapted to the cross section range of the accessories.
- Copper and aluminium conductors, which could be round or sectoral shaped, stranded or solid, can be connected
- No special tools for the installation.

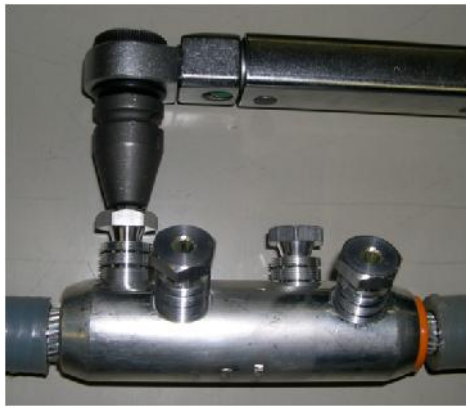

Advantages of Bolted Connectors

- Range taking concerning conductor cross section for low and medium voltage application
- Adapted to the cross section range of the accessories
- Copper and aluminium conductor
- Round, sectoral shaped
- Stranded, solid
- No special tools for the installation.

2. Presentation of the GHP connectors

History of Screw Development

Development of bolted contacts since the eighties worldwide.

1. Headless screws (grub screw) with inner hexagon

- installation with a torque wrench which shows the required moment
- or depending on the „intuition“ of the installer

2. Shear screws with one shear level

- predetermination of the right shear moment by the manufacturer
- usable for low voltage connectors / high voltage connectors

3. Multilevel shear screws for medium voltage application

- predetermination of the right shear moment regarding the cross section
  → NPAG screw: biggest conductor with the biggest moment (contact force)
- screw shears off nearly flash with the surface of the connector
  → no negative influence on the electrical field of the accessories

Design of Bolted Contacts/Screws depending on the Voltage Level

- **Low Voltage**

- big excentricity and rel. big excess length after shear-off allowed
- screws with 1 - 2 shear levels

- **Medium Voltage**

-only small excentricity and small excess length after shear-off
- screws with 2 - 4 shear levels

- **High Voltage**

- round conductor channel especially adapted to the conductor
- no excentricity
- one shear level
- high force screws for aluminium Milliken conductor with big cross section

Multi Shear Level Screw from NPAG

The NPAG multi shear level screw is the only one on the market which has both main advantages.

- Biggest moment
  for the biggest cross section:
  means biggest contact force
  for the biggest conductor
  with the biggest nominal current

- Installation with standard keys which are commercially available

- During shear off the contact part of the screw will not be influenced (no constriction of the contact part).

Installation with:
allen key

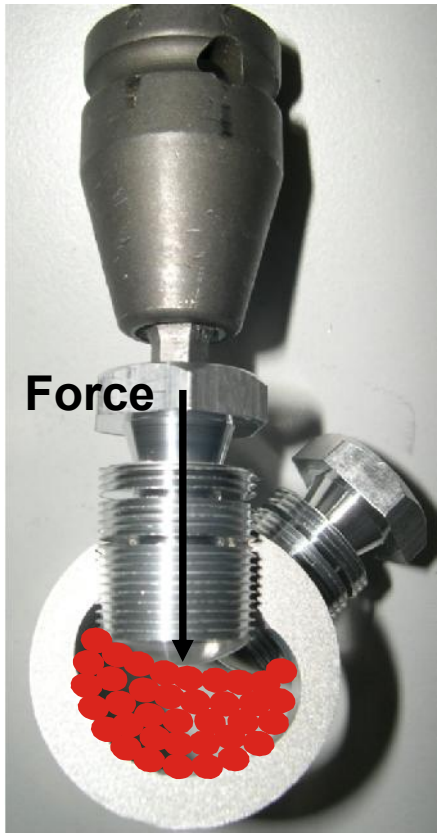

hexagon socket

Low Voltage Screwing Connectors

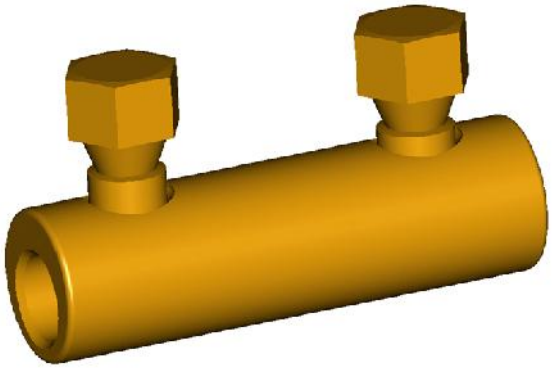

Low Voltage Screwing Connectors

Screws with one (max. two) shear levels

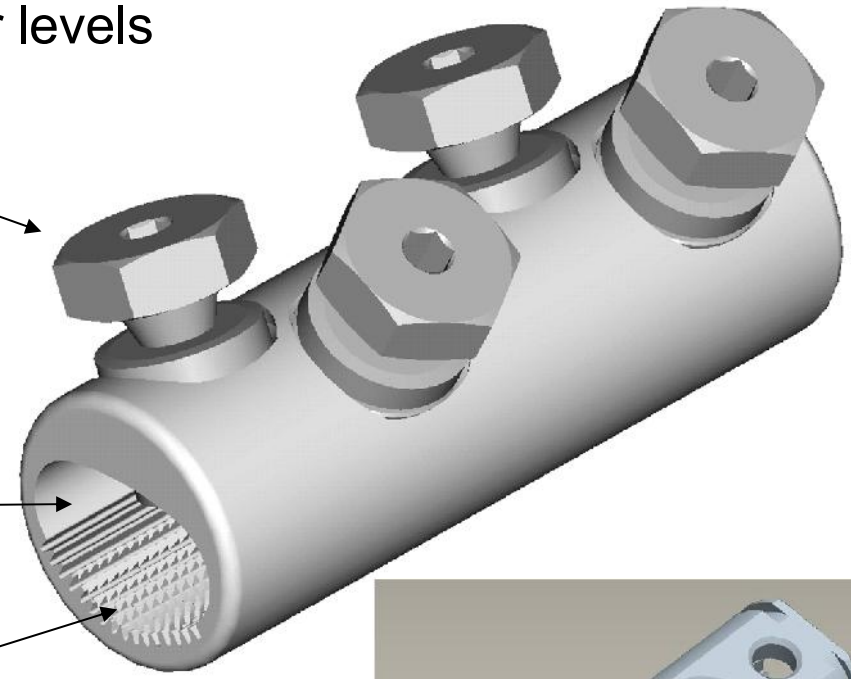

- sectoral shaped or round conductor channel
- rel. big excentricity
- grooves cross and lengthwise
  → piercing of solid conductors

Typical Low Voltage Screwing Connectors

	Al in mm^2			Cu in mm^2		
	se	**re**	**sm**	**sm**	**re**	**rm**
416 MS-SV		6-16			4-16	6-16
SE1650	25-50	10-50	35-50	35-50		10-50
SE25150	35-150	25-50	35-120	25-95		25-95
35150 SV	35-150	35-50	35-120	35-95		35-95
25150 SV	25-150	25-50	35-120	25-95		25-95
SE25150SM	35-150	25-50	35-150	25-150		25-150
SE150300	150-300	/	150-300	150-300		150-300

Medium Voltage Screwing Connectors

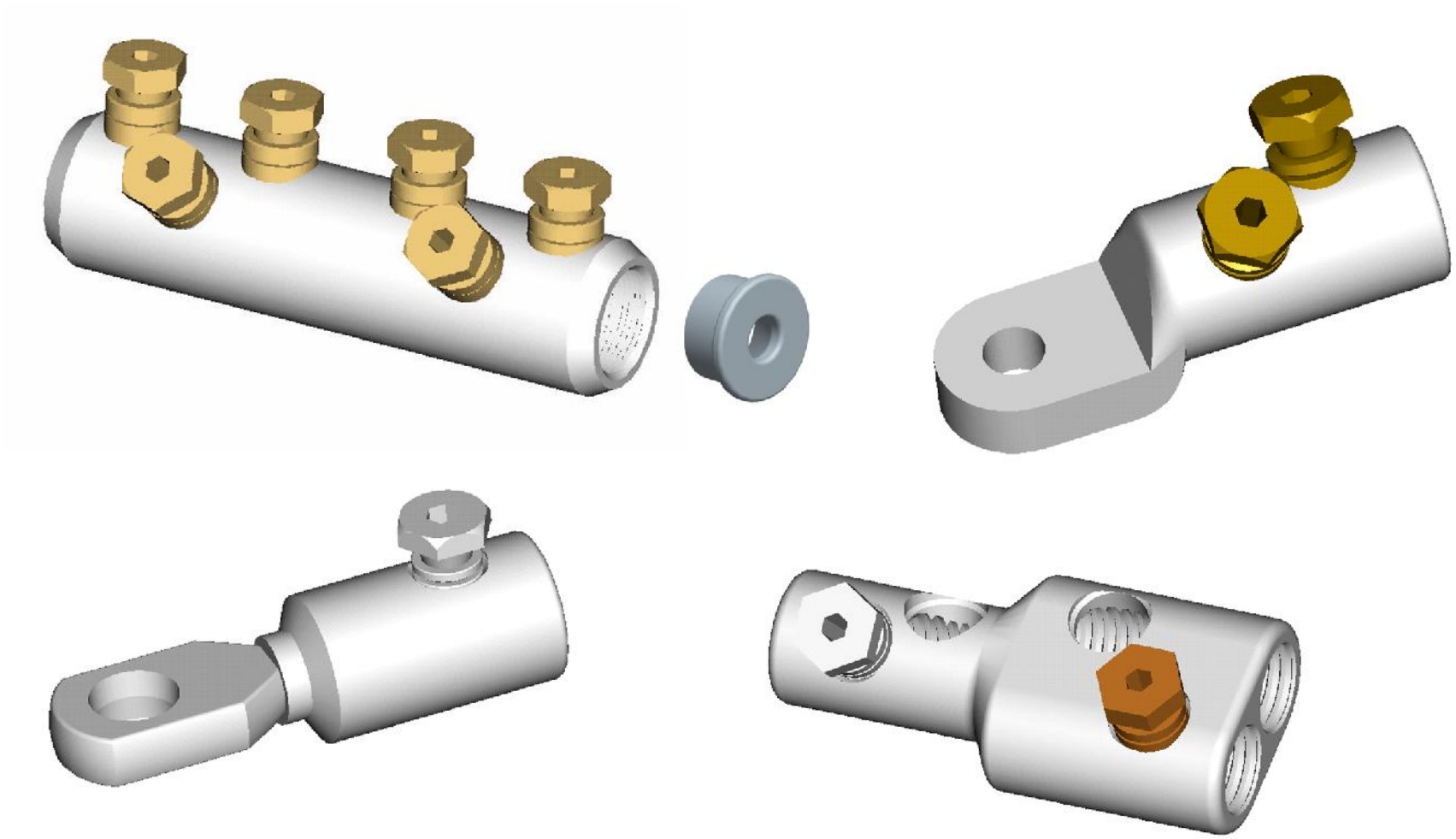

Medium Voltage Screwing Connectors

- Screws with 2 - 4 shear levels, made of brass with tinned surface or made of aluminium alloy
- Connector body made of aluminium alloy
- Sectoral shaped or round conductor channel with small excentricity, with or without separating web, tinned surface
- Centering rings (plastic)
- Additional tinned tubes for very small cross section .

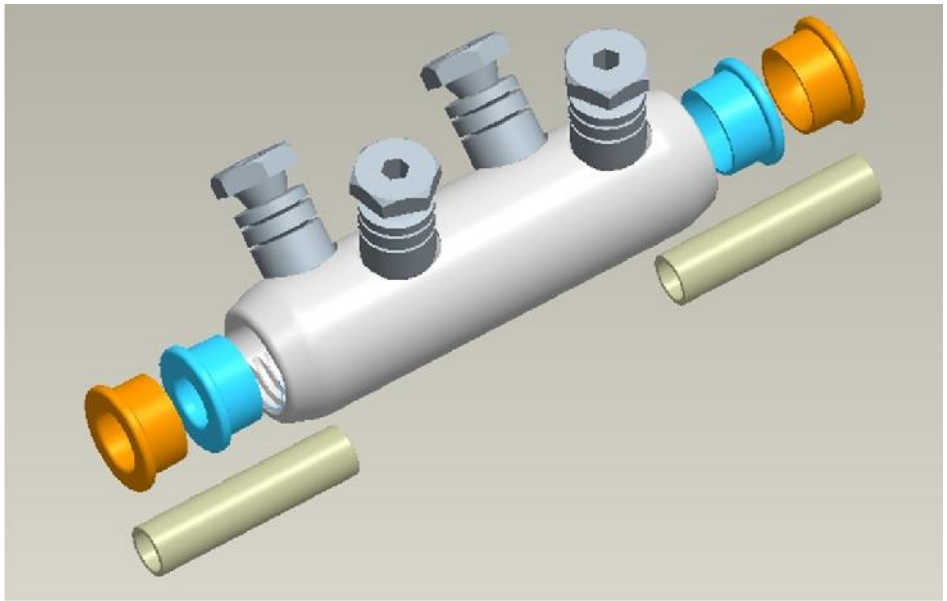

Typical Medium Voltage Screwing Connectors

	Al in mm^2 rm(v)	re	Cu in mm^2 rm(v)
M16-95	16-95	16-95	10-95
M50-150	50-150	50-150	50-120
M70-240*)	70-240	70-240	70-240
M95-240	95-240	95-240	95-240
MRL(T)95-240	95-240	95-240	95-185
M120-300	120-300	120-300	120-300
M185-400	185-400	185-400	185-400
M400-630	400-630	400-630	400-630

*) sectoral shaped conductor possible

Test according to EN 61238-1

➢ Electrical test procedure

6 connectors have to be tested:

- 200 load cycles
  (median connector 100°C;
  reference conductor: 120 – 140 °C)
- 6 short circuits
  (reference conductor: 250 – 270 °C)
- 800 load cycles
- measuring of the resistance and of the temperature.

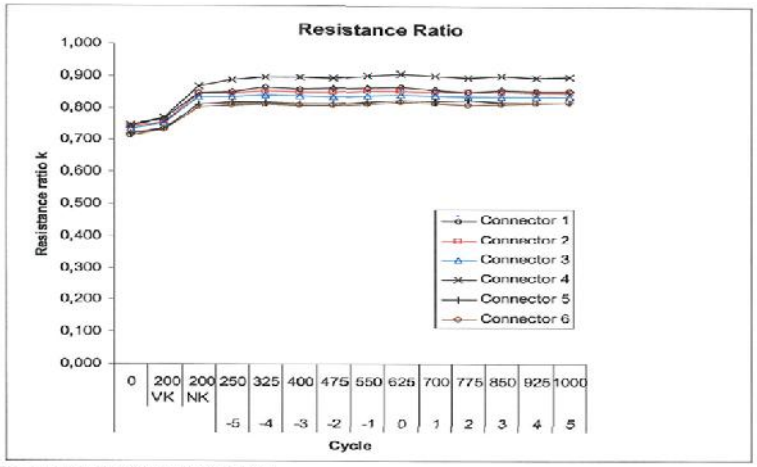

Figure 5.1: Resistance factors

➢ Mechanical test procedure

3 connectors have to be tested:

- tensile force F during 1 min
  → no damaging or sliding

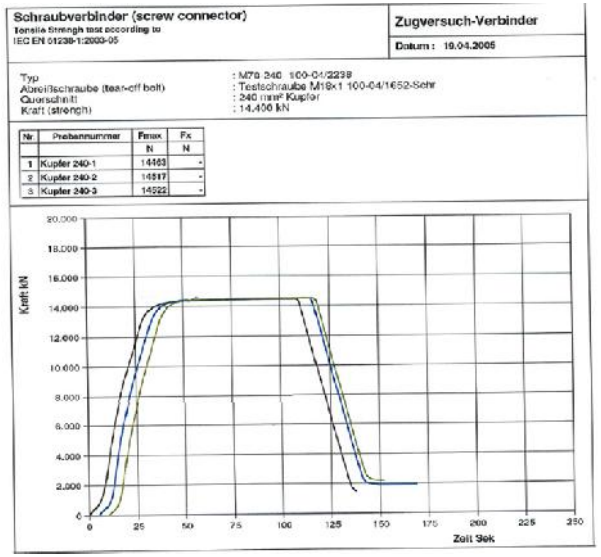

High Voltage Screwing Connector

- Screws with one shear level (up to 100 .. 120 Nm)
- High force screws for Aluminium Milliken conductor
- Round conductor channel especially adapted to the conductor
- No excentricity
- Connecting parts up to 2000 (2500) mm² according to customer requirements

Electrical and mechanical requirements

- Transmission of electrical energy during the whole lifetime without negative influence on
  - → the own function
  - → joints, terminations and plugs concerning their thermal, mechanical and insulation behaviour

- Ensure the required tensile strength

Lean Bolted Connector M70 – 240 for round and sectoral shaped Al and Cu conductor

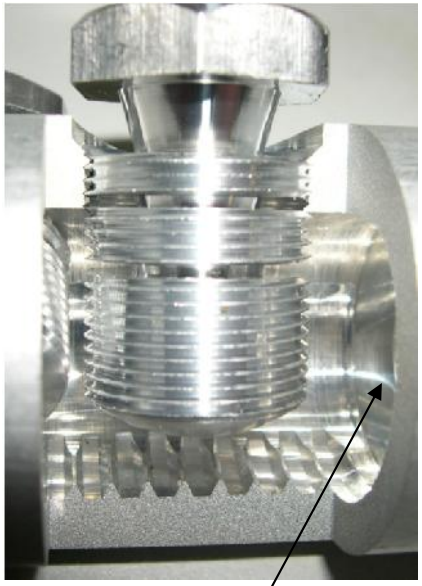

Optimized fine thread for
a big force and a high stability

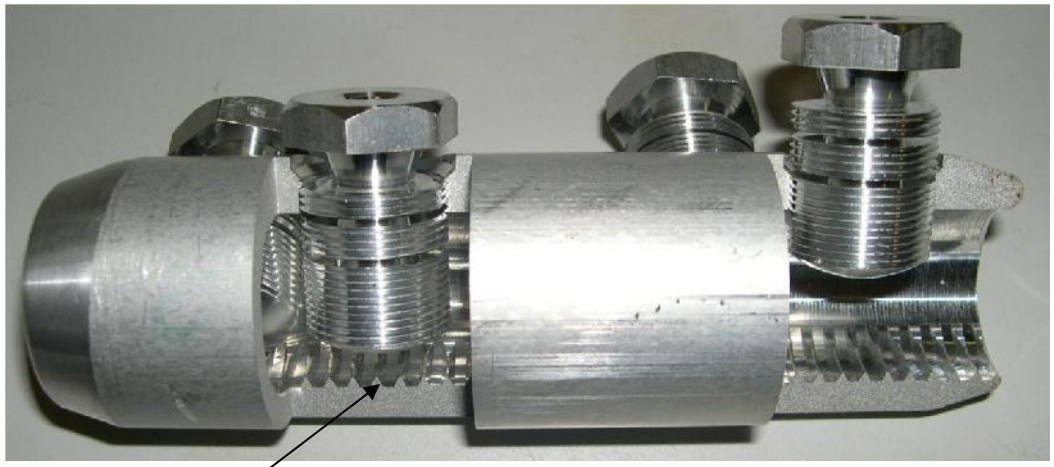

Integrated separation web
against moisture and oil;
absolutely leakproof
because of machining

Well defined grooves:
very good electrical contact and mechanical
behaviour

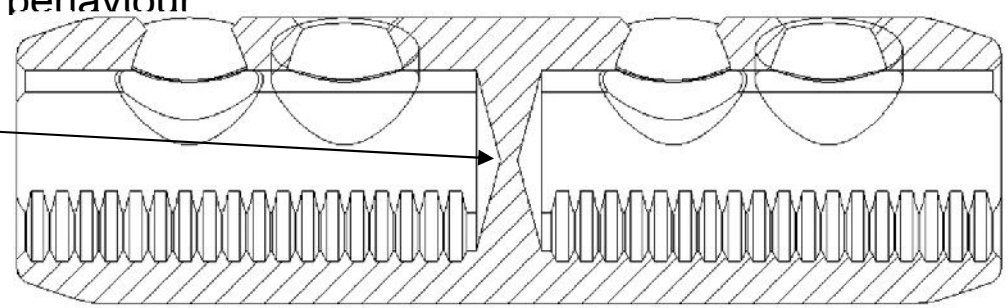

Copper Aluminium Parts

Connecting of copper and aluminium
by a very high force
→ ideal electrical contact
between both materials

Manufacturing of cable lugs or other
by forging and / or machining
for an especially high current carrying capability

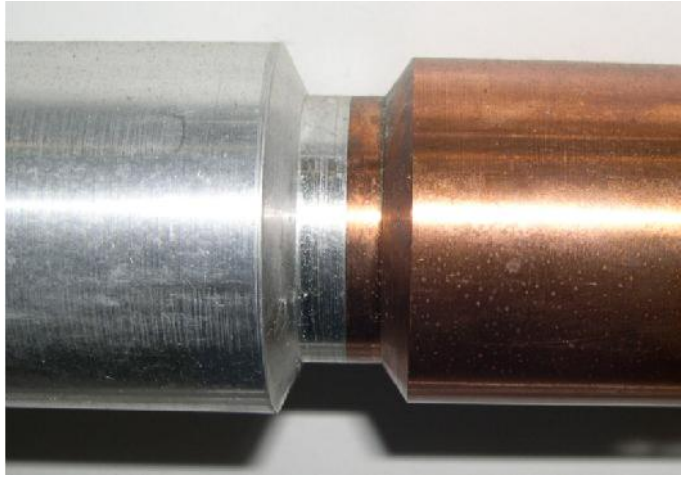

Floating of the conductor channel

Stamp: manufactured by wire-electro discharge machining at NPAG

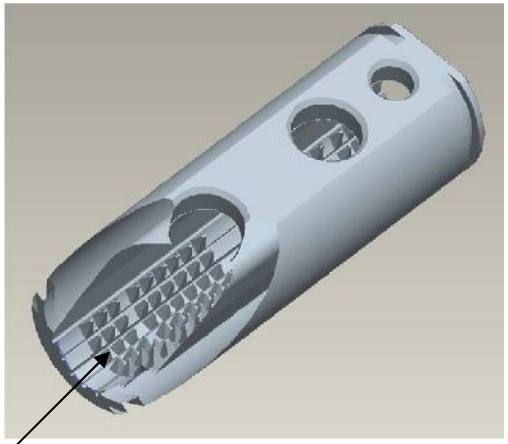

Floating of the conductor channel by a stamp

Machining afterwards → pyramidal grooves

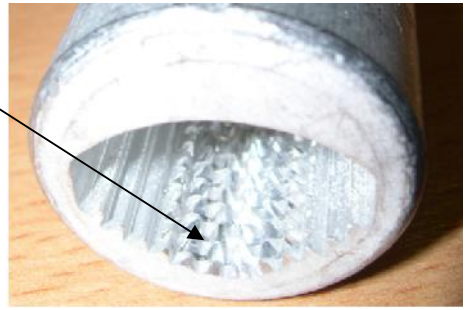

Split Bolt Connectors

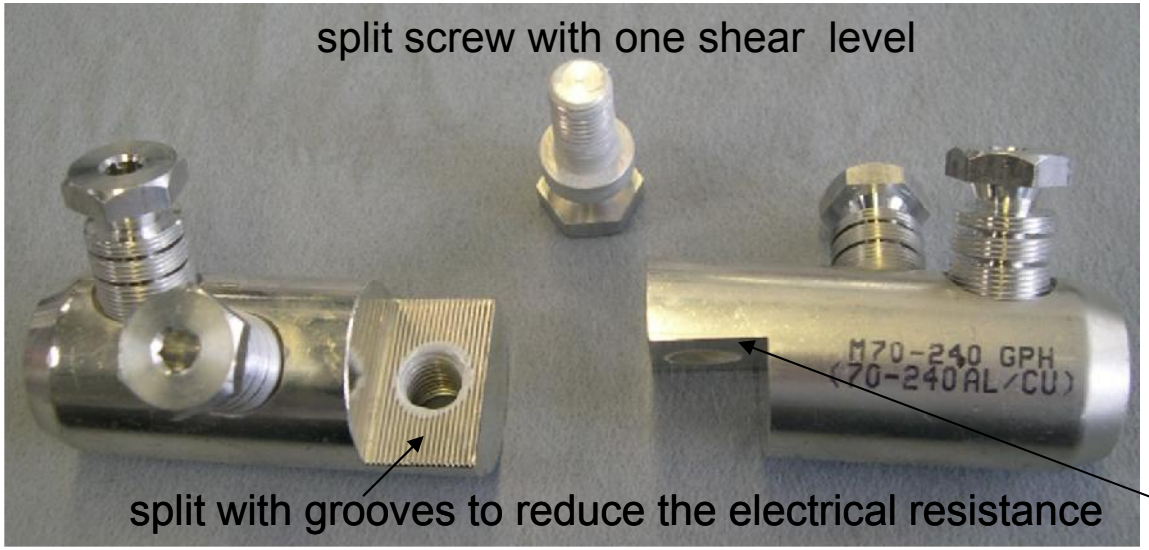

Available:
70 – 240 mm²
120 – 300 mm²
185 – 400 mm²

Special shape for adjustment during connection of both parts

Split Bolt Branch Connector according to customer requirements

3. Applications

Demand of EDF France

✓ EDF wants the introduction of bolted contacts for the whole range of the medium accessories: joints, terminations and connectors by 2010.

✓ All the accessoires need to pass the electrical qualification tests on the contacts (IEC 61238) and the products (Cenelec HD629.1 S1).

✓ The product redesign program is now half way. The joints, outdoor terminations and 400A connectors are already qualified.

Bolted Contacts for EDF

EDF will change from deep indent to bolted contacts until 2010.
>>> NPAG developed connectors and lugs for that reason.

- **M70-240** connector
- 400A T-plug lug
- Indoor/outdoor lugs
- Branch connector

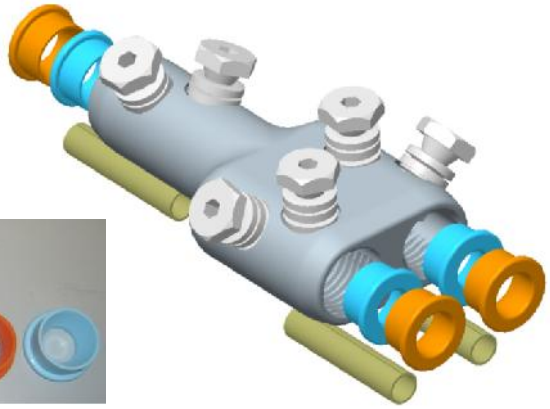

For cross sections 70mm² - 240mm² round and sectoral shaped aluminium and copper conductors (50 mm² is possible by using tinned aluminium tubes)

- **250 A elbow and straight lug** (with screwed copper PIN)

for cross sections 35 – 95 mm² round stranded copper and aluminium conductor

Test of Bolted Contacts for EDF according to EN 61238-1

- **Electrical test procedure**

6 connectors have to be tested.

- 200 load cycles: median connector 100°C; reference conductor: 120 – 140 °C
- 6 short circuits: reference conductor: 250 – 270 °C
- 800 load cycles
- measuring of the resistance and of the temperature

- **Mechanical test procedure**

3 connectors have to be tested.

- tensile force F during 1 min → no damaging or sliding

Test of Bolted Contacts for EDF according to EN 61238-1

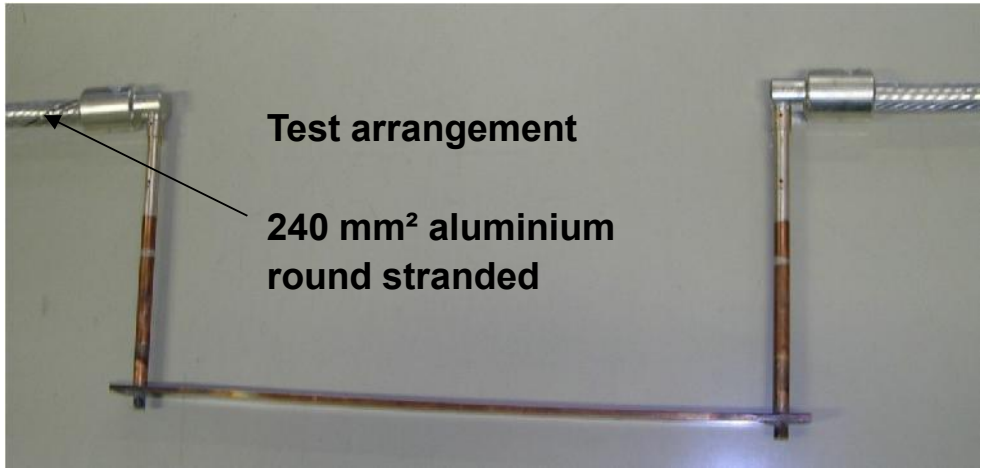

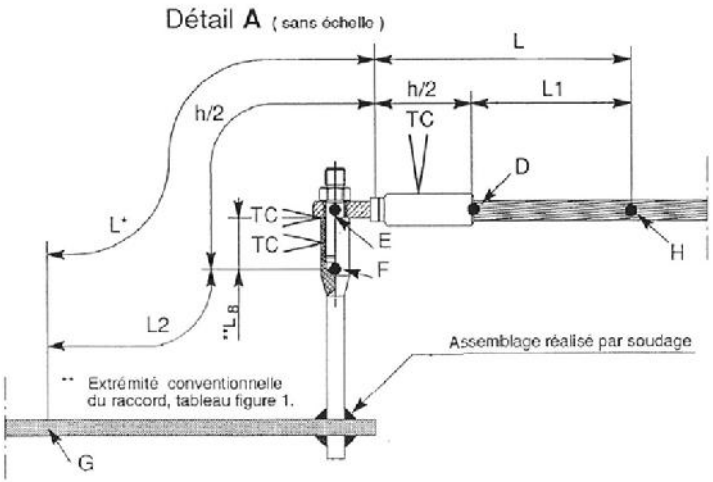

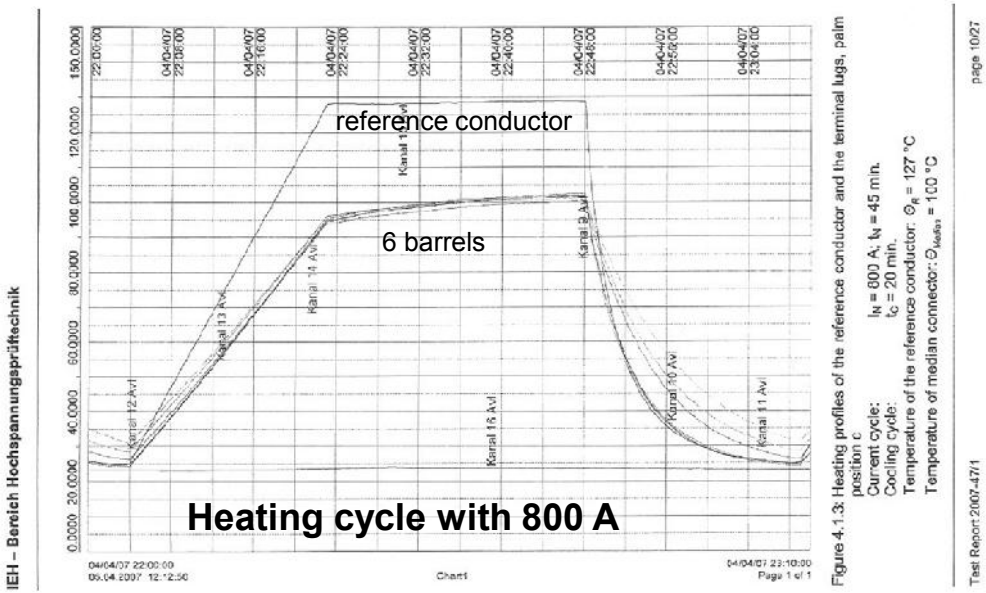

400A T-plug lug

Test of Bolted Contacts for EDF according to EN 61238-1

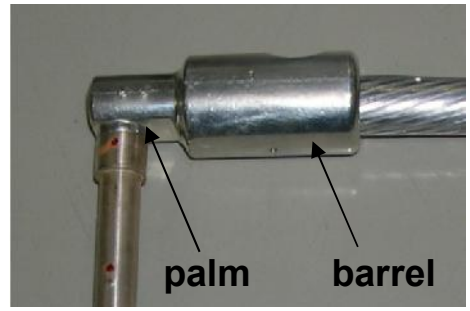

400A T-plug lug

Figure 5.5 shows the graph of the resistance factors k of the terminal lugs.

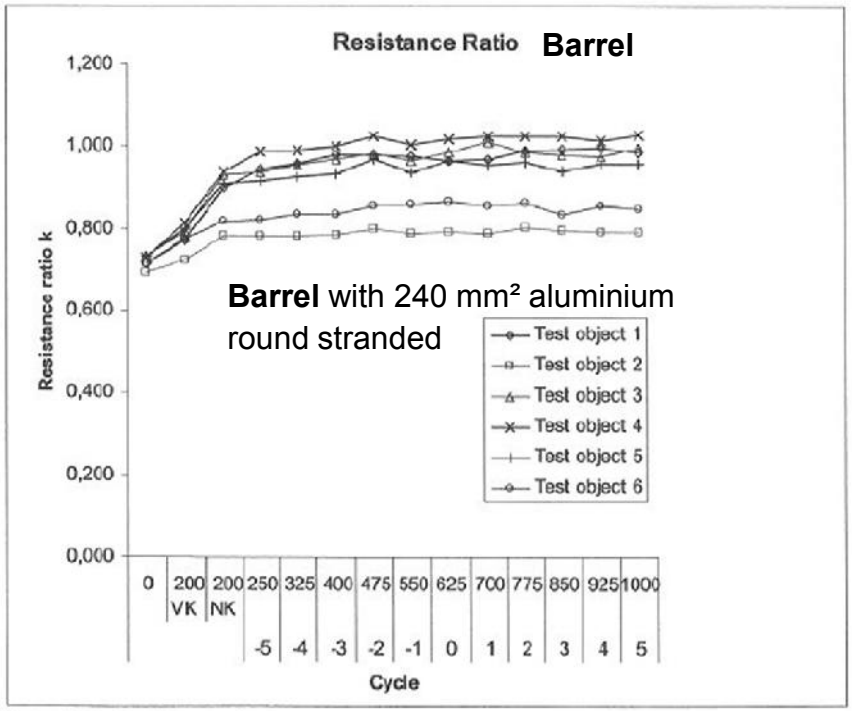

Figure 5.5: Resistance factors

Figure 5.5 shows the graph of the resistance factors k of the terminal lugs.

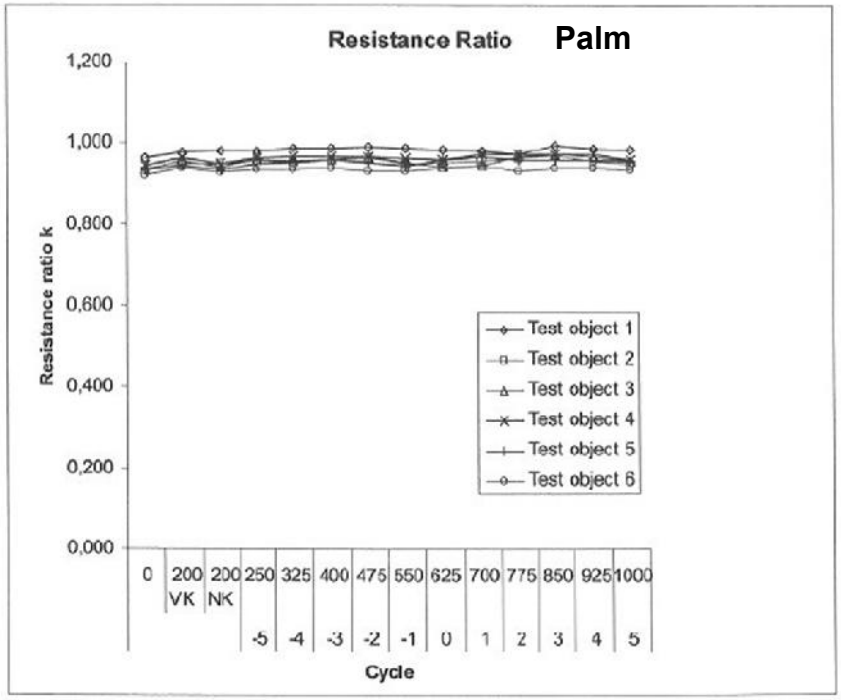

Figure 5.5: Resistance factors

Test of Bolted Contacts for EDF according to EN 61238-1

Connector M 70-240

Electrical test with 240 mm² copper

Current cycle: I_N = 1020 A; t_N = 50 min.
Cooling cycle: t_C = 25 min.
Temperature of the reference conductor: Θ_R = 130°C
Temperature of median connector: Θ_{Median} = 100°C

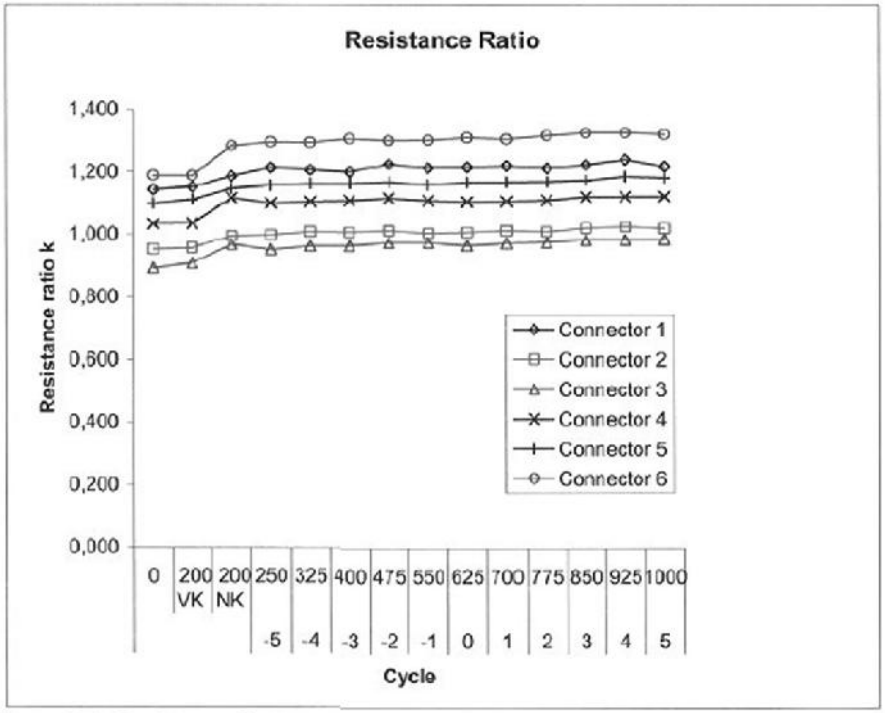

Figure 5.1: Resistance factors

Tensile test with 240 mm² copper

Test on copper conductor 240 mm²

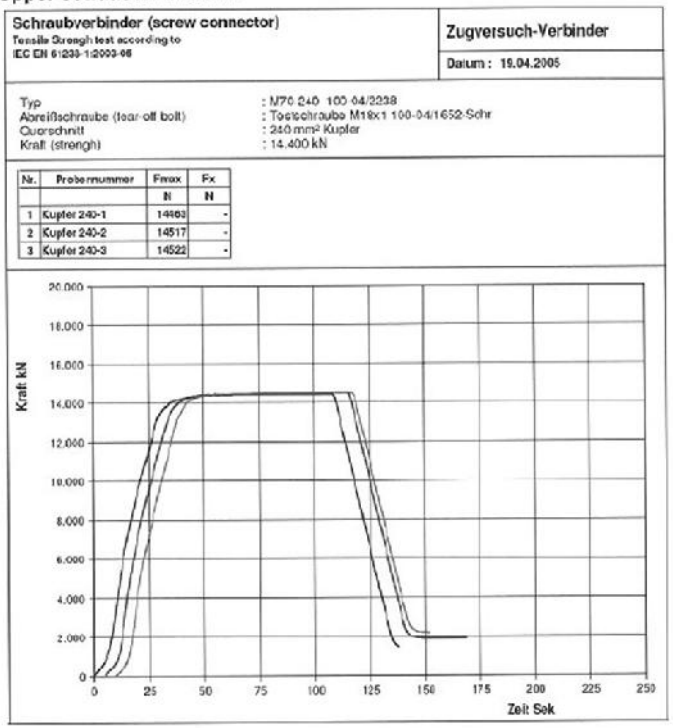

Schraubverbinder (screw connector)
Tensile Strength test according to IEC EN 61238-1:2003-06

Zugversuch-Verbinder
Datum: 19.04.2005

Typ: M70 240 100-04/2238
Abreißschraube (tear-off bolt): Testschraube M16x1 100-04/1652-Schr
Querschnitt: 240 mm² Kupfer
Kraft (strength): 14.400 kN

Nr.	Probennummer	Fmax	Fx
		N	N
1	Kupfer 240-1	14463	-
2	Kupfer 240-2	14517	-
3	Kupfer 240-3	14522	-

Export of NPAG Products into around 50 Countries

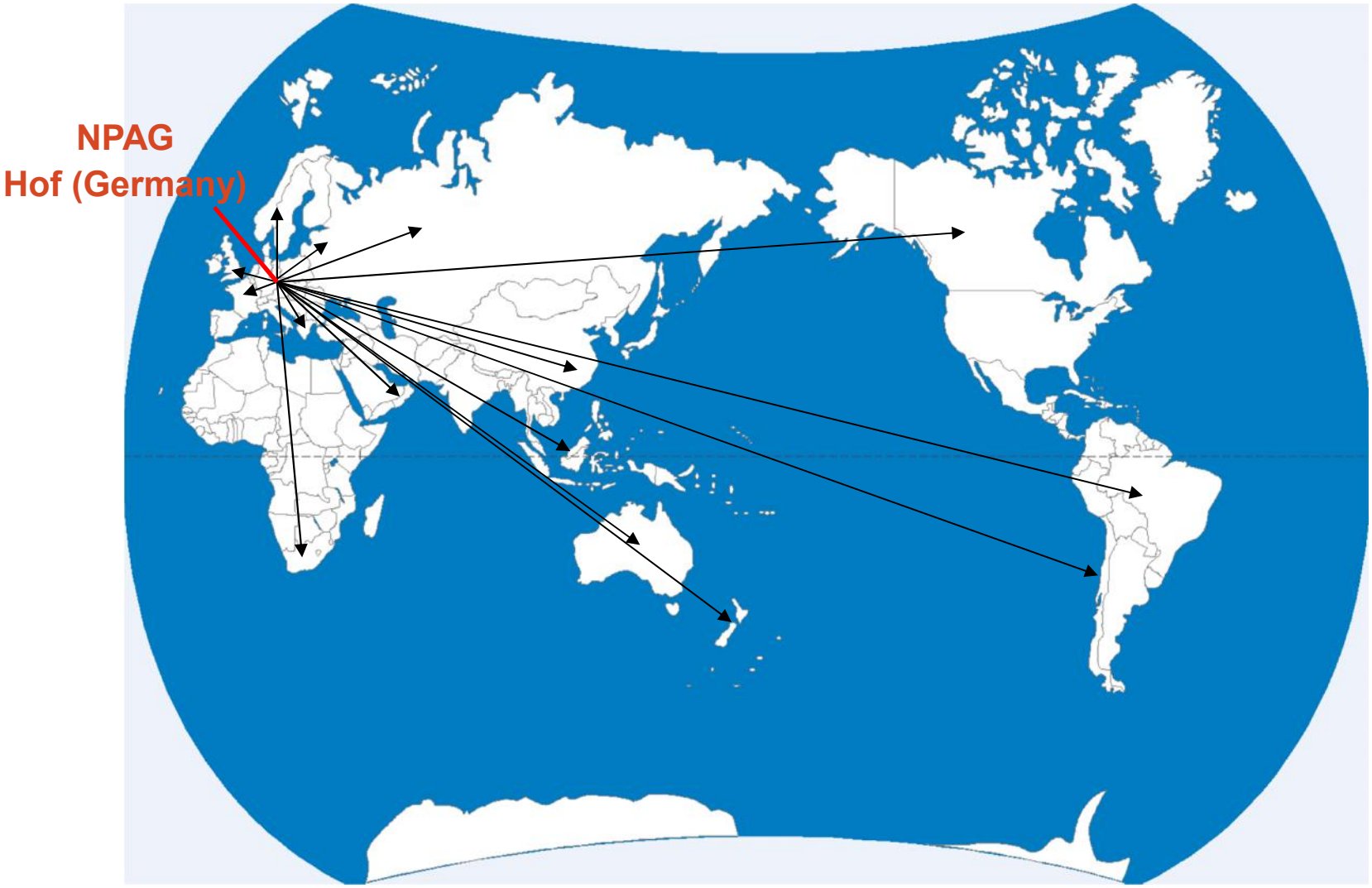

4. Conclusion

Conclusion

- Bolted contacts are getting more and more the standard in 'advanced countries' in electrotechnical applications.

- Nexans has with GPH the state of the art in the development of this product line.

- Special and customised designs are possible based on an in depth product knowledge.